REVISIONS			
REV.	DESCRIPTION	DATE	APPROVED
A	NEW RELEASE	9-1-11	RGB

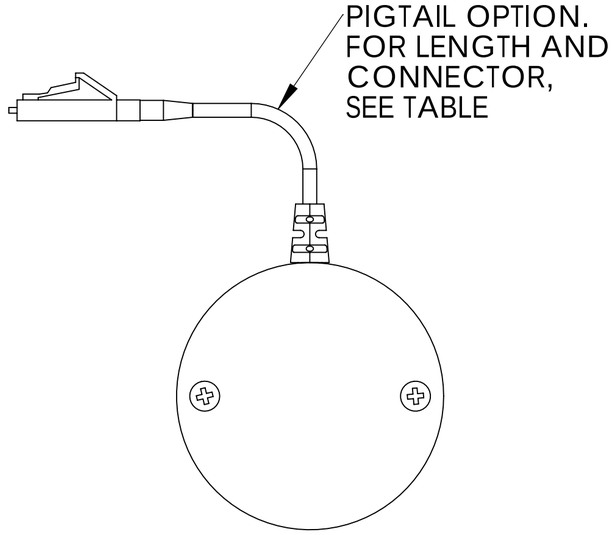

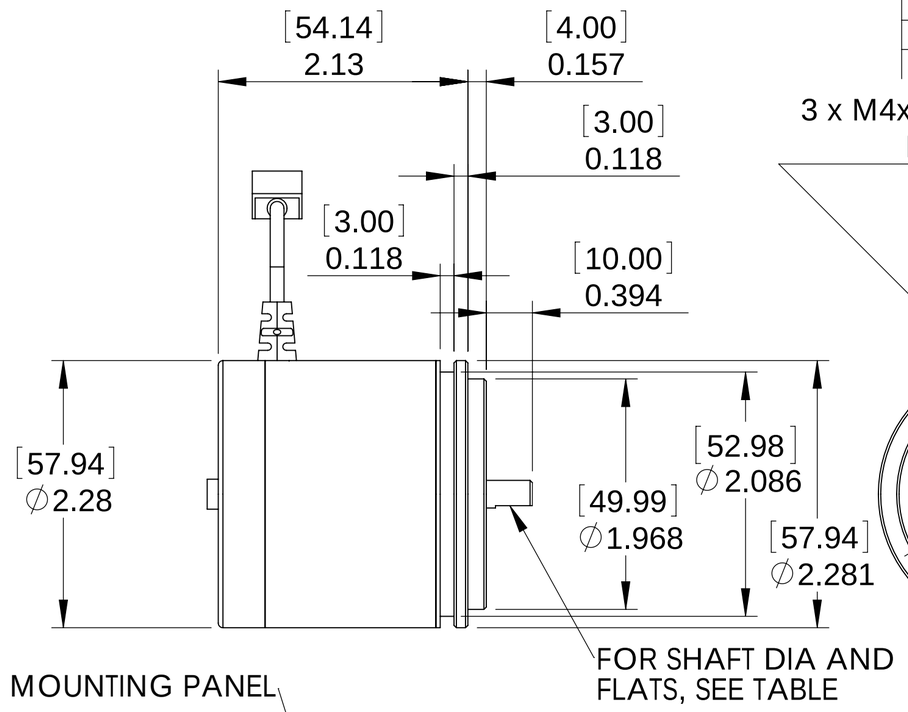

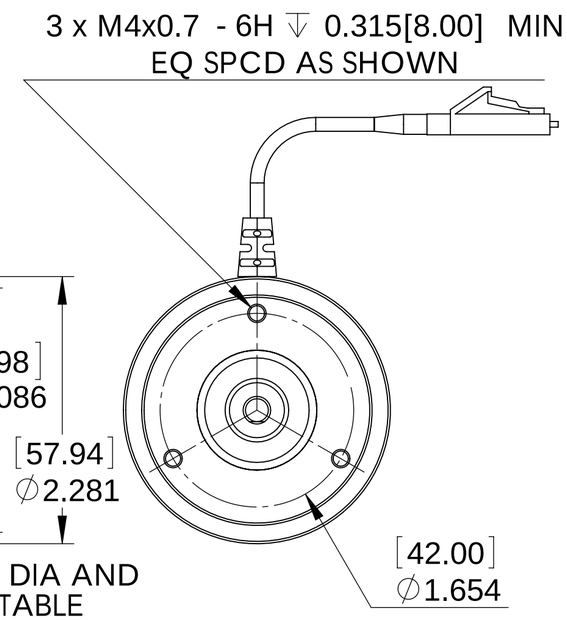

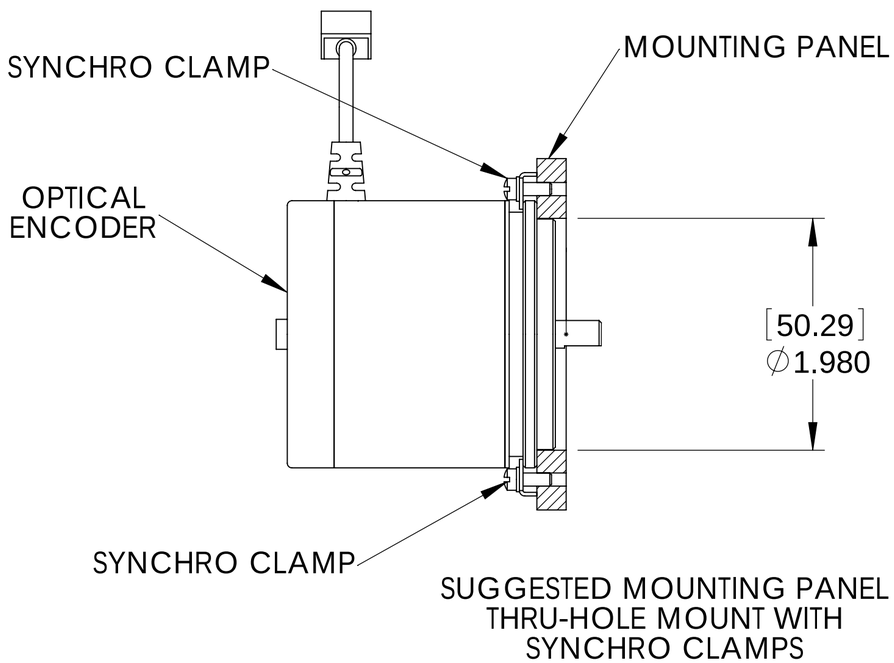

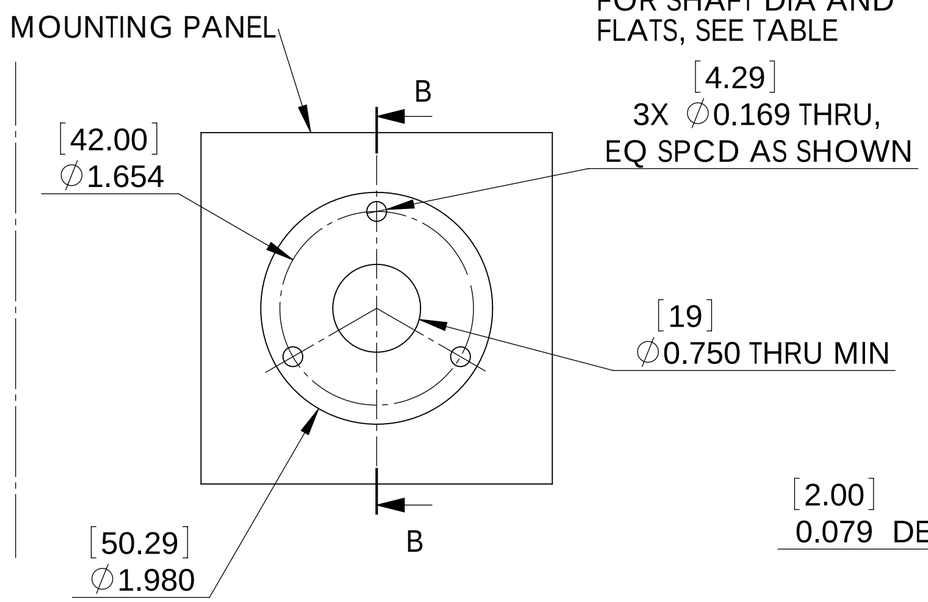

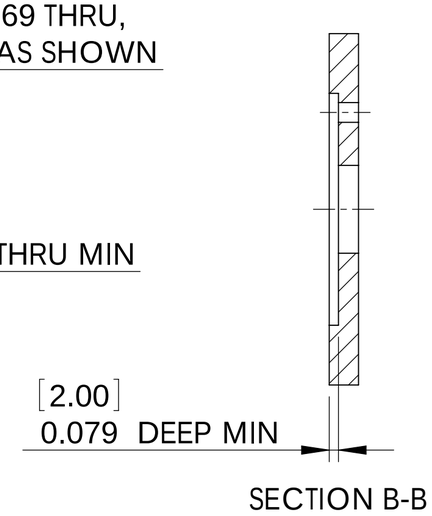

SUGGESTED MOUNTING PANEL
COUNTER-BORED PANEL
WITH MOUNTING SCREWS

PART NUMBER ORDERING CODE

MR328 - D 06 C 05

RESOLUTION
D = 360

SHAFT SIZE IN MILLIMETERS
6 = 6MM SHAFT
(∅0.2358 ±.0002 [5.989 ±0.010]
WITH 0.216 [5.50 FLAT])

CONNECTOR TYPE
C = DUPLEX LC

PIGTAIL LENGTH IN METERS
05 = 5 METERS
10 = 10 METERS

OTHER SHAFT OPTIONS ARE AVAILABLE

3. WARNING: KEEP CONNECTOR COVERS IN PLACE DURING STORAGE, TO PROTECT FIBER OPTIC INTERFACES.

2. WARNING: DO NOT DROP UNIT. DROPPING OR OTHER SEVERE SHOCK IMPACTS MAY DAMAGE UNIT.

1. ALWAYS USE FLEXIBLE COUPLING WHEN MOUNTING SHAFT TO EXTERNAL EQUIPMENT.

NOTES: UNLESS OTHERWISE SPECIFIED

PROPRIETARY AND CONFIDENTIAL
THE INFORMATION CONTAINED IN THIS DRAWING IS THE SOLE PROPERTY OF MICRONOR CORPORATION. ANY REPRODUCTION IN PART OR AS A WHOLE WITHOUT THE WRITTEN PERMISSION OF MICRONOR CORPORATION IS PROHIBITED.

UNLESS OTHERWISE SPECIFIED:
DIMENSIONS ARE IN INCHES [MM]
TOLERANCES:
ANGULAR: ± .5°
TWO PLACE DECIMAL ±.02
THREE PLACE DECIMAL ±.005
FOUR PLACE DECIMAL ±.0010
INTERPRET GEOMETRIC TOLERANCING PER:
MATERIAL
FINISH
DO NOT SCALE DRAWING

	NAME	DATE
DRAWN	R BOYER	9-1-11
CHECKED		
ENG APPR.		
MFG APPR.		
Q.A.		

COMMENTS:

MICRONOR INC.
NEWBURY PARK, CA (805) 499-0114

TITLE:
MRI COMPATIBLE
OPTICAL ENCODER

SIZE	DWG. NO.	REV
C	MR328	A

SCALE: 1:1 | WEIGHT: | SHEET 1 OF 1